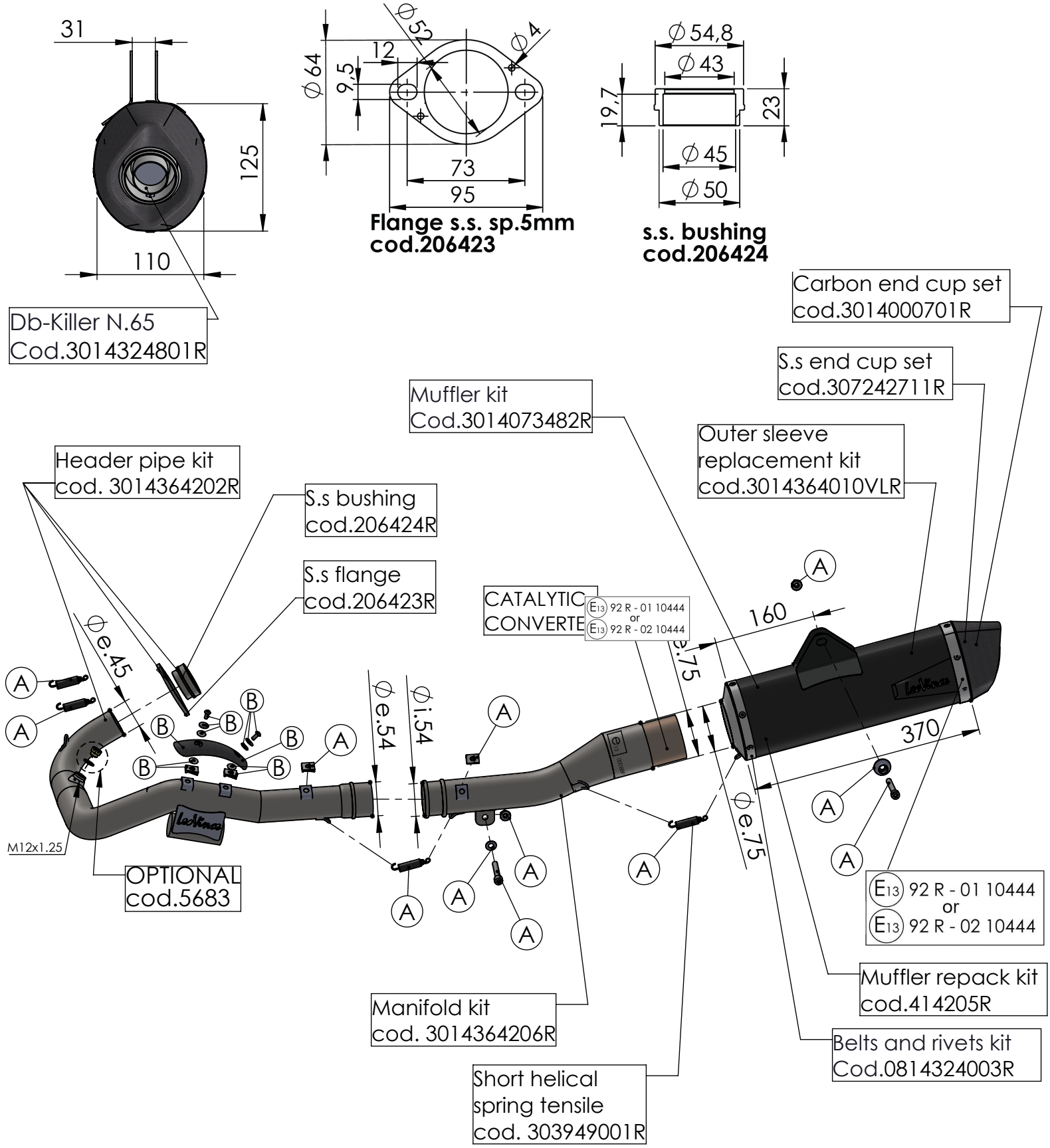

ART. 14073K - SPARE PARTS

KTM 690 ENDURO R / 690 SMC R 690
GAS GAS ES 700 / GAS GAS SM 700 (Also fits 35kW version)

(A) FITTING KIT cod.3014364601R
(B) CARBON COVER cod.308213001R